Knurled grip knobs

- **Use** with analogue indicators having gravity movements **(G type).**
- **Glass-fibre reinforced polyamide-based (PA) technopolymer case.**
  Resistant to solvents, oils, greases and other chemical agents.
- Black oxide **steel insert** with standard H7 tolerance reamed hole.
- Socket head **grub screw** with cup end for fitting to shaft (in accordance with UNI 5929-85).

When ordering please specify code and description (see page 360 how to select the indicator, to be ordered separately).

Installation instructions (see page 361).

Application example with GA12 indicator

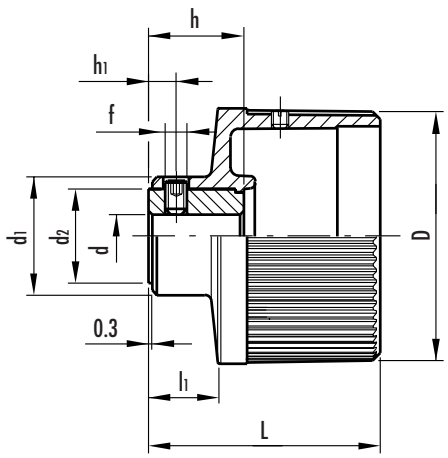

Standard elements		Main dimensions							Mounting hole		Weight
Code	Description	D	L	d_1	d_2	h_1	f	l_1	d H7	h	grams
CE.30101	IZN.60-GXX1 A-10	59	53	27	22	6	M5	15	10	22	110
CE.30201	IZN.80-GXX2 A-12	79	57	33	26	6	M5	17	120	24	190

Matching indicators						
Code	Description	GA01	GA02	GA11	GA12	GW12
CE.30101	IZN.60-GXX1-A10	•		•		
CE.30201	IZN.80-GXX2-A12		•		•	•
Indicator data on page		362	362	363	363	365

"ELESA" and "GANTERGRIFF" models all rights reserved in accordance with the law. Always mention the source when reproducing our drawings.